200 LEXINGTON AVENUE . SUITE 711 . NY, NY 10016
(p) +1.212.729.1938 (e) INFO@MILANOSMARTLIVING.COM

B L C O N C E R T O

The “BL CONCERTO” is an elegant round shaped dining table that can expand to 161.42”.
The table stores one leaf internally - each leaf is 17.71” wide. There is a total of six leaves.

Top & Base available in finishes, Cod. 1 – Cod. 9

200 LEXINGTON AVENUE . SUITE 711 . NY, NY 10016
(p) +1.212.729.1938 (e) INFO@MILANOSMARTLIVING.COM

BL CONCERTO

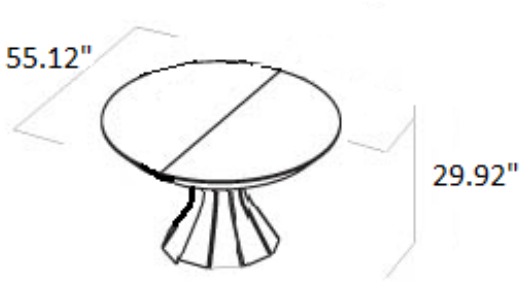

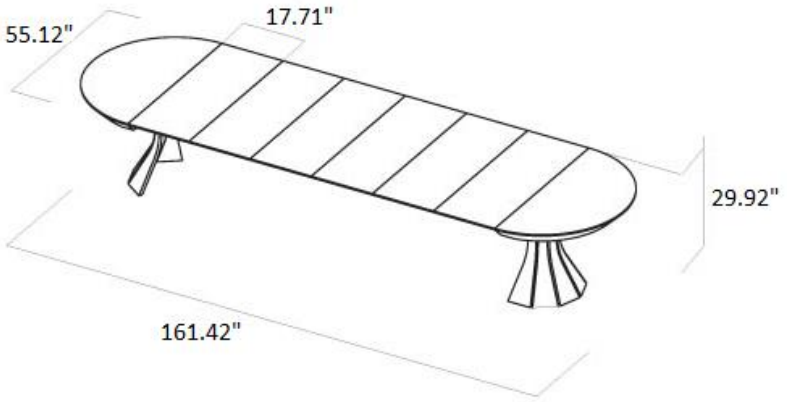

Available finishes shown below:

In addition to the finishes shown above, the "BL CONCERTO" is also available in matte lacquer (closed or open pore), high gloss lacquer, and custom finishes